[INCH-POUND]
PPP-B-1672D
February 1, 1996
(SUPERSEDING)
PPP-B-1672C
November 8, 1978
Amendment-4
August 29, 1986

FEDERAL SPECIFICATION

BOXES, SHIPPING, REUSABLE WITH CUSHIONING

The General Services Administration has authorized the use of this federal specification, by all federal agencies.

1. SCOPE AND CLASSIFICATION

1.1 Scope. This specification covers shipping boxes consisting of a fiberboard box with appropriate cushioning components for the intended use (see 6.1).

1.2 Classification.

1.2.1 Types, styles, and sizes. The cushioned boxes (Fast Packs) covered by this specification are classified by the following types, styles, and sizes as specified (see 6.2). Sizes are in centimeters (inches).

Type I - Vertical star packs (see figure 1).

Style A - Regular slotted carton (RSC)

Style B - Double cover container (DBLCC)

Style C - Modified double cover container (Modified DBLCC)

Beneficial Comments, recommendations, additions, deletions, clarifications, etc., and any data which may improve this document should be sent to: AFMC LSO/LOP, 5215 Thurlow Street, Wright-Patterson AFB OH 45433-5540.

FSC 8115

Sizes - 155 x 155 x 255 (6 x 6 x 10)
205 x 205 x 305 (8 x 8 x 12)
255 x 205 x 305 (10 x 10 x 12)
305 x 305 x 355 (12 x 12 x 14)
305 x 305 x 460 (12 x 12 x 18)
355 x 355 x 405 (14 x 14 x 16)

Type II, Style D - Modified triple slide (Convoluted foam) folding packs (see figure 2).

Sizes - 155 x 125 x 65 (6 x 5 x 2-1/2)
155 x 125 x 90 (6 x 5 x 3-1/2)
230 x 155 x 65 (9 x 6 x 2-1/2)
230 x 155 x 90 (9 x 6 x 3-1/2)
255 x 255 x 90 (10 x 10 x 3-1/2)
305 x 205 x 65 (12 x 8 x 2-1/2)
305 x 205 x 90 (12 x 8 x 3-1/2)
330 x 330 x 90 (13 x 13 x 3-1/2)
405 x 405 x 90 (16 x 16 x 3-1/2)
460 x 305 x 65 (18 x 12 x 2-1/2)
460 x 305 x 90 (18 x 12 x 3-1/2)
610 x 405 x 90 (24 x 16 x 3-1/2)

Type III, Style G - Full telescoping encapsulated (FTC) (see figure 3).

Sizes - 510 x 355 x 230 (20 x 14 x 9)
610 x 355 x 355 (24 x 14 x 14)
610 x 460 x 405 (24 x 18 x 16)
635 x 355 x 355 (25 x 14 x 14)
660 x 230 x 230 (26 x 9 x 9)
760 x 405 x 355 (30 x 16 x 14)
815 x 305 x 355 (32 x 12 x 14)
815 x 460 x 405 (32 x 18 x 16)
865 x 610 x 460 (34 x 24 x 18)
760 x 685 x 355 (30 x 27 x 14)

Type IV, Style B - Double cover (DBLCC) horizontal star container (see figure 4)

Sizes - 510 x 355 x 355 (20 x 14 x 14)
560 x 405 x 405 (22 x 16 x 16)

2. APPLICABLE DOCUMENTS

2.1 Government publications. The following documents, of the issue in effect on date of invitation for bids or request for proposal, form a part of this specification to the extent specified herein.

Federal Specifications

MMM-A-250	- Adhesive, Water-Resistant (For Closure of Fiberboard Boxes)
MMM-A-1617	- Adhesive, Rubber Base, General Purpose
PPP-B-665	- Boxes: Paperboard, Metal Edged and Components
PPP-T-60	- Tape: Packaging, Waterproof
QQ-A-225/6	- Aluminum Alloy 2024, Bar, Rod and Wire; Rolled, Drawn or Cold Finished
QQ-S-571	- Solder, Electronic (96 to 485 °C)

Federal Standards

FED-STD-101	- Test Procedures for Packaging Materials
FED-STD-123	- Marking for Shipment (Civil Agencies)

Commercial Item Descriptions

A-A-1492	- Tape, Gummed, Paper, Reinforced and Plain, for Sealing and Securing
A-A-1671	- Tape, Gummed (Paper, Reinforced, Laminated).

(Activities outside the Federal Government may obtain copies of federal specifications, standards, and commercial item descriptions as outlined under General Information in the Index of Federal Specifications, Standards and Commercial Item Descriptions. The Index, which includes cumulative bimonthly supplements as issued, is for sale on a subscription basis by the Superintendent of Documents, U.S. Government Printing Office, Washington DC 20402.)

(Single copies of this specification and other federal specifications and commercial item descriptions required by activities outside the Federal Government for bidding purposes are available without charge from the General Services Administration, Federal Supply Service Bureau, Specification Section, Suite 8100, 470 L'Enfant Plaza, SW, Washington D.C., 20407.

(Federal Government activities may obtain copies of federal standardization documents and the Index of Federal Specifications, Standards and Commercial Item Descriptions from established distribution points in their agencies.)

Military Specifications

MIL-PRF-26514 - Polyurethane Foam, Rigid of Flexible, for Packaging

(Copies of military specifications and standards required by contractors in connection with specific procurement functions are obtained from the Standardization Documents Order Desk, Building 4D, 700 Robbins Avenue, Philadelphia, PA. 19111-5094.)

Federal Regulations

Federal Acquisition Regulation

(The Code of Federal Regulations (CFR) and the Federal Register are for sale on a subscription basis from the Superintendent of Documents, U.S. Printing Office, Washington DC 20402. When indicated, reprints of certain regulations may be obtained from the federal agency responsible for issuance thereof.)

2.2 Other publications. The following documents form a part of this specification to the extent specified herein. Unless a specific issue is identified, the issue in effect on date of invitation for bids or request for proposal shall apply.

ANSI/ASQC

Z1.4 - Sampling Procedures and Tables for Inspection by Attributes (DoD Adopted)

(Private sector and civil agencies may purchase copies of these voluntary standards from ANSI, 11 W. 42nd St., 13th Floor, New York, NY 10036 or ASQC, 611 E. Wisconsin Ave., P.O. Box 3005, Milwaukee, WI 53201-3005.)

ASTM

D 3951	- Commercial Packaging, Standard Practice for (DoD Adopted)
D 4727	- Standard Specification for Corrugated and Solid Fiberboard Sheet Stock (Container Grade) and Cut Shapes (DoD Adopted)
D 5118/5118M	- Fabrication of Fiberboard Shipping Boxes, Standard Practice for (DoD Adopted)

(Private sector and civil agencies may purchase copies of these voluntary standards from ASTM, 1916 Race Street, Philadelphia PA 19103-1187.)

The Institute for Interconnecting and Packaging Electric Circuits

IPC MF-150 - Metal Foil for Printed Wiring Applications

(Private sector and civil agencies may purchase copies of these voluntary standards from 7380 N. Lincoln, Lincolnwood IL 60646-1797.)

(DoD Activities may obtain copies of those adopted voluntary Standards listed in the DoD Index of Specifications and Standards free of charge from the Standardization Documents Order Desk, Building 4D, 700 Robbins Avenue, Philadelphia, PA. 19111-5094.)

3. REQUIREMENTS

3.1 Materials.

3.1.1 Boxes. Material for all boxes shall conform to ASTM D 4727, type CF, class WR. Boxes of type I, type III (except for box sizes requiring a variety DW, material grade V13c in figure 3), and type IV packs shall be a variety SW, material grade V3c. Type II packs shall be a variety SW, material grade W5c.

3.1.2 Cushioning. Cushioning material for type I, III, and IV packs shall meet the first article requirements of MIL-PRF-26514 except that use of the color coding requirement shall be optional and the material shall conform to type I, class 2, grade C. Cushioning for type II, style D packs shall conform to type III, class 2, grade A, B, or C.

3.1.2.1 Convolutions. All convolutions for cushioning shall have dimensions and tolerances as specified in figure 5. Each convoluted cushioning component shall have peaks with a uniform height of K.

3.1.2.2 Laminations. Deep or long body cushions (such as the star shaped die-cut bodies) shall be made from a whole piece or shall be built up to the specified dimension by means of laminations. All lamination pads used in a cushioning system shall be composed of material having the same cushioning characteristics. The minimum nominal thickness of lamination pads shall be 50 mm (2 inches). Thicker lamination pads may be used to minimize the number of laminations. Convoluted cushioning shall be made from a whole piece or shall be built up to the specified thickness by lamination of a nominal 50 mm (2 inches) or thicker pad, provided that the convoluted section shall be integral with a minimum 25 mm (1 inch) thick base section (see figure 5). Type II convoluted cushioning shall be cut from a single piece of foam and shall have a minimum base thickness of 13 mm (1/2 inch).

3.1.2.3 Bonding of laminations. As a minimum, laminations shall be spot bonded with adhesive specified in 3.1.5 sufficiently to maintain true alignment and integrity of the built-up cushioning configuration. The built-up body of type I packs may be assembled without bonding the laminations together.

3.1.2.4 Anti-static property. The cushioning for type II packs shall be uniformly impregnated with an anti-static agent and shall have a static decay time no greater than two seconds which shall not increase with use or age when tested as specified in 4.4.

3.1.2.5 Corrosivity. Anti-static cushioning material shall not cause corrosion when tested as specified in 4.5.

3.1.3 Tape. Tape shall be 50 mm (2 inches) in width and shall conform to A-A-1492, Grade B; A-A-1671, type II, class 2 or PPP-T-60, type III, class 1.

3.1.4 Metal fasteners. Metal fasteners shall be steel staples and steel stitching wire specified for use in ASTM D 5118/5118M or 25 mm (1 inch) metal stay specified for use in PPP-B-665 as applicable.

3.1.5 Adhesive. Adhesive for bonding of the appropriate cushioning and fiberboard components shall conform to MMM-A-1617, type I or MMM-A-250, type II.

3.2 Design and construction.

3.2.1 Type I. The box, with appropriate cushioning components, shall be constructed in accordance with style A (RSC), style B (DBLCC), or style C (Modified DBLCC) designs shown in figure 1 and as specified herein (see 6.2).

3.2.1.1 Style A. Style A (RSC) boxes shall be in accordance with ASTM D 5118/5118M. The manufacturer's joint and the bottom flaps shall be stapled or stitched as specified therein. The cushioning components shall be placed in the box (see figure 1) and the top shall be taped closed with a minimum 50 mm x 50 mm (2 x 2 inch) strip of tape as specified in 3.1.3 or equivalent minimum closure to facilitate delivery and undamaged reopening.

3.2.1.2 Style B. Style B (DBLCC) shall be in accordance with ASTM D 5118/5118M except that the covers shall extend to one-half the depth of the tube. The lap for the tube shall be fastened inside the adjoining panel.

3.2.1.3 Style C. Style C (Modified DBLCC) shall be in accordance with ASTM D 5118/5118M except that joints for the covers and single-piece tube shall be butted and secured with metal fasteners as specified in 3.1.4 and the covers shall extend to one-half the depth of the tube.

3.2.2 Type II, Style D. The pack shall be constructed in accordance with figure 2. The box and cushioning shall be constructed in accordance with the triple slide box style (Modified TS) and ASTM D 5118/5118M except that the middle box shall be omitted and the sleeve shall have the overlap stitched, stapled, or glued (see 3.1.4 and 3.1.5) outside the side panel. The top of the box shall be the large portion of the box where the manufacturer's joint or seam is located with the open flutes facing downward.

3.2.3 Type III, Style G. The telescoping and encapsulated packs shall be constructed in accordance with style FTC of ASTM D 5118/5118M with appropriate cushioning as shown in figure 3.

3.2.4 Type IV, Style B. The horizontal star packs shall be constructed in accordance with the DBLCC shown in figure 4. The box shall be constructed in accordance with 3.2.1.2.

3.2.5 Bonding of components. Adhesive specified in 3.1.5 shall be applied to cushioning components described herein to provide a minimum fifty (50) percent contact area to adhere the cushioning to each of the box components. For type IV, style B in figure 4,

and type III, style G in figure 3, the top cushioning pads shall be centered and adhered to the inside face of the top cap. In addition, style G side and end cushioning pads shall be arranged and adhered in accordance with the applicable view in figure 3. For type II packs (see figure 2), the cushioning shall be centered and adhered to the inside faces of the slide.

3.3 Dimensions. All box sizes shall be based on and identified by the inside dimensions of the innermost shell such as box, tube, or slide and shall be accurate to within 3 mm (1/8 inch). These dimensions shall be cited in the sequence of length, width, and depth. The center of the die-cut star cavity for type I and type IV shall be within 13 mm (1/2 inch) of true center.

3.4 Markings. Markings shall be either printed or stenciled in black letters. All markings shall be in the upright direction and shall be clear and legible.

3.4.1 Compliance and certificate markings. Compliance and certificate markings shall be imprinted on all boxes in accordance with ASTM D 5118/5118M except as specified herein. Data markings such as the NSN, inside dimensions, and any other which are required to be printed elsewhere on the box shall not be repeated in the compliance and certificate markings. The compliance and certificate markings shall be placed on the bottoms of the boxes.

3.4.2 Type I, type III, and type IV packs. The following markings shall be in characters of a size not less than 13 mm (1/2 inch) high, except that the National Stock Number (NSN) may be not less than 10 mm (3/8 inch). The markings shall be centered on the lower half of two opposite faces of the style A packs parallel to the closure seam formed by the outer flaps and style G pack covers. The markings shall be on two opposite faces of the bottom cap of the style B and style C packs. The markings format shall be as follows:

Format:

REUSABLE
FAST PACK - (Enter proper pack code, see TABLE I)
(Enter proper pack size and shipping cube, see TABLE I; use either metric or English units, see 6.2)
(Enter proper NSN, see TABLE I)

Example:

REUSABLE
FAST PACK - XA2
205 x 205 x 305 CU 0.013
8115-00-192-1604

TABLE I. Fast Pack codes, sizes, cubes, and NSN's.

Pack Code No	Container Size ID mm (In)	Unit Cube m^3 (Ft^3)	Shipping Cube m^3 (Ft^3)	National Stock Number
(Type I)				
-XA1	155 x 155 x 255 (6 x 6 x 10)	0.006 (0.21)	0.007 (0.241)	8115-00-192-1603
-XA2	205 x 205 x 305 (8 x 8 x 12)	0.013 (0.44)	0.014 (0.498)	8115-00-192-1604
-XA3	255 x 255 x 305 (10 x 10 x 12)	0.02 (0.69)	0.023 (0.798)	8115-00-192-1605
-XA4	305 x 305 x 355 (12 x 12 x 14)	0.033 (1.17)	0.037 (1.311)	8115-00-134-3655
-XA5	305 x 305 x 460 (12 x 12 x 18)	0.043 (1.5)	0.047 (1.673)	8115-00-050-5237
-XA6	355 x 355 x 405 (14 x 14 x 16)	0.051 (1.81)	0.057 (2.008)	8115-00-134-3656
(Type II)				
-XC1	155 x 125 x 65 (6 x 5 x 2-1/2)	0.001 (0.04)	0.002 (0.058)	8115-00-787-2142
-XC2	155 x 125 x 90 (6 x 5 x 3-1/2)	0.002 (0.06)	0.002 (0.078)	8115-00-787-2147
-XC3	230 x 155 x 65 (9 x 6 x 2-1/2)	0.002 (0.08)	0.003 (0.102)	8115-00-101-7647
-XC4	230 x 155 x 90 (9 x 6 x 3-1/2)	0.003 (0.11)	0.004 (0.136)	8115-00-101-7638
-XC5	305 x 205 x 65 (12 x 8 x 2-1/2)	0.004 (0.14)	0.005 (0.181)	8115-00-787-2146
-XC6	305 x 205 x 90 (12 x 8 x 3-1/2)	0.006 (0.19)	0.007 (0.241)	8115-00-787-2148
-XC7	460 x 305 x 65 (18 x 12 x 2-1/2)	0.009 (0.31)	0.011 (0.402)	8115-01-019-4085
-XC8	460 x 305 x 90 (18 x 12 x 3-1/2)	0.013 (0.44)	0.015 (0.536)	8115-01-019-4084
-XC9	255 x 255 x 90 (10 x 10 x 3-1/2)	0.006 (0.2)	0.007 (0.256)	8115-01-057-1244
-XD1	330 x 330 x 90 (13 x 13 x 3-1/2)	0.01 (0.34)	0.012 (0.422)	8115-01-057-1243
-XD2	405 x 405 x 90 (16 x 16 x 3-1/2)	0.015 (0.52)	0.018 (0.631)	8115-01-057-1245
-XD3	610 x 405 x 90 (24 x 16 x 3-1/2)	0.022 (0.78)	0.027 (0.936)	8115-01-093-3730

TABLE I. Fast Pack codes, sizes, cubes, and NSN's - Continued.

Pack Code No	Container Size ID mm (In)	Unit Cube m^3 (Ft^3)	Shipping Cube m^3 (Ft^3)	National Stock Number
(Type III)				
-XE1	760 x 405 x 355 (30 x 16 x 14)	0.109 (3.889)	0.125 (4.422)	8115-00-516-0242
-XE2	815 x 305 x 355 (32 x 12 x 14)	0.088 (3.111)	0.102 (3.600)	8115-00-519-1825
-XE3	610 x 355 x 355 (24 x 14 x 14)	0.077 (2.722)	0.089 (3.147)	8115-00-550-3558
-XE4	510 x 355 x 230 (20 x 14 x 9)	0.042 (1.458)	0.049 (1.732)	8115-00-516-0251
-XE5	635 x 355 x 355 (25 x 14 x 14)	0.080 (2.84)	0.093 (3.273)	8115-00-550-3574
-XE6	815 x 460 x 405 (32 x 18 x 16)	0.152 (5.333)	0.168 (5.915)	8115-01-015-1315
-XE7	610 x 460 x 405 (24 x 18 x 16)	0.114 (4.000)	0.159 (4.536)	8115-01-015-1312
-XE8	660 x 230 x 230 (26 x 9 x 9)	0.035 (1.219)	0.041 (1.453)	8115-01-015-1313
-XE9	865 x 610 x 460 (34 x 24 x 18)	0.243 (8.500)	0.301 (10.636)	8115-01-015-1314
-XF1	760 x 685 x 355 (30 x 27 x 14)	0.185 (6.563)	0.213 (7.535)	8115-01-094-6520
(Type IV)				
-XG1	510 x 355 x 355 (20 x 14 x 14)	0.064 (2.269)	0.071 (2.494)	8115-01-010-8956
-XG2	560 x 405 x 405 (22 x 16 x 16)	0.092 (3.259)	0.100 (3.545)	8115-01-006-7257

3.4.3 Type II packs. The following markings shall be in characters of a size not less than 6 mm (1/4 inch) high. The markings shall be placed within approximately the right one-third of the two narrow sides of the pack. The marking format shall be as follows:

Format:

REUSABLE - FAST PACK - (Enter proper pack code, see TABLE I)
(Enter proper size and shipping cube, see TABLE I; use either metric or English units, see 6.2)
(Enter proper NSN, see TABLE I)

EXAMPLE:

REUSABLE - FAST PACK - XC1
155 x 125 x 65 CU 0.001
8115-00-787-2142

The slide shall be marked with the words "PUSH OPEN" and "ANTI STATIC" visually centered on each end. The words "PUSH OPEN" and "ANTI STATIC" shall be in 10 mm (3/8 inch) characters. The words "ANTI STATIC" shall be placed a 6 mm (1/4 inch) below the words "PUSH OPEN". There shall be a 50 mm (2 inch) space between the words "PUSH" and "OPEN" and the words "ANTI" and "STATIC" as shown below.

[50 mm (2 inch)]

PUSH OPEN
ANTI STATIC

3.5 Recovered Materials. The offeror/contractor is encouraged to use recovered materials to the maximum extent practicable, in accordance with paragraph 23.403 of the Federal Acquisition Regulation (FAR).

3.6 Workmanship. In addition to meeting the requirements of the individual material specifications, the completed box and cushioning components shall be clean, free of malformed or misaligned edges, faces, scores, slots, die-cuts, and any defects which may affect durability, strength, and serviceability. All components shall be accurately dimensioned and fabricated so that the assembled components will fit closely without undue binding.

4. QUALITY ASSURANCE PROVISIONS

4.1 Responsibility for inspection. Unless otherwise specified in the contract, the contractor is responsible for the performance of all inspection requirements as specified herein. Except as otherwise specified in the contract, the contractor may use his own or any other facilities suitable for the performance of the inspection requirements specified herein, unless disapproved by the government. The government reserves the right to perform any of the inspections set forth in the specification where such inspections are deemed necessary to assure that supplies and services conform to prescribed requirements.

4.2 Component and material quality conformance inspection. In accordance with 4.1, components and materials shall be inspected in accordance with all the requirements of referenced drawings, specifications, and standards unless otherwise excluded, amended, modified, or qualified in this specification or applicable

purchase document. Unless otherwise specified, sampling for inspection shall be performed in accordance with ANSI/ASQC Z1.4.

4.3 Inspection of the end item. Unless otherwise specified, all inspections shall be performed in accordance with the test conditions specified in the applicable test method document or applicable paragraphs in this specification.

4.3.1 Classification of defects. All defects shall be classified as either a critical, major, or minor defect. A critical defect shall be justified as a defect that may cause injury to personnel or property. A major defect shall be justified as a defect that may affect performance and quality of the container. A minor defect shall be justified as a defect that is a discrepancy in this specification but does not apply to a critical or major defect. All critical and major defects shall constitute a failure of the container to meet the requirements of this specification and shall deem the container unacceptable by the Government (see 4.1.1). All minor defects shall be under the discretion of the contracting officer to either deem the container acceptable or unacceptable.

4.3.2 Examination of the end item. The end item shall be examined for the defects listed in 4.3.2.1 at the inspection level set forth in 4.3.2.4. A random sample of boxes of each type, style, and size offered shall be selected from each lot and examined for visual and dimensional acceptance. The lot size, for purposes of determining the sample size in accordance with ANSI/ASQC Z1.4, shall be expressed in units of boxes for examination under 4.3.2.1; in units of bundles for examination under 4.3.2.2; and in units of shipping containers fully prepared for delivery for examination under 4.3.2.3.

4.3.2.1 Examination of the end item for defects in appearance, construction, and workmanship. The sample unit for examination shall be one complete unit consisting of a box and appropriate cushioning components. Defects that require measurement shall be measured to the nearest 1 mm (1/16 inch). Measurements shall be taken using a standard metric unit measuring tape with increments no greater than 1 mm. A standard English unit measuring tape with increments no greater than 1/16 inch may be used. Shipping cube is calculated using the external dimensions. Unit cube is calculated using the internal dimensions. For unit cube measurements, measure length along side opposite the joint from one end to the other. Measure width along end opposite the joint from one side to the other. The depth shall be the distance between inner faces of top and bottom. Dimensions are always

given in this order: length x width x depth. Examination shall be as follows:

Examine	Defect	Category Major	Minor
Type of board (3.1.1)	Material not as specified.	X	
Cushioning (3.1.2)	Material not as specified.	X	
	Dimensions not as specified (see 3.1.2.1.)	X	
Cushion and component bonding	Adhesive not applied or cushioning not securely adhered to board.	X	
	Lamination pads are not composed of the same material (see 3.1.2.2).	X	
	Lamination pads are less than 50 mm (2 inches) thick (see 3.1.2.2).	X	
	Type II convoluted cushioning is not cut from a single piece of foam (see 3.1.2.2).	X	
	Laminations do not use adhesive as specified in 3.1.5 (see 3.1.2.3).	X	
Tape (3.1.3)	Tape is not as specified.	X	
Metal Fasteners (3.1.4)	Metal fasteners are not as specified.	X	
Adhesive (3.1.5)	Adhesive is not as specified.	X	
Design and construction (3.2)	Boxes not type and style specified (6.2)	X	
	Boxes are not constructed in accordance with the applicable figures (see 3.2.1, 3.2.2, 3.2.3, & 3.2.4).	X	

Examine	Defect	Major	Minor
Style A Boxes (3.2.1.1)	Style A boxes are not in accordance with ASTM D 5118/5118M.	X	
	Manufacturer's joint and bottom flange are not stapled or stitched.	X	
	Cushioning components are not placed inside.	X	
	Top is not closed to facilitate delivery.		X
	Top is damaged when reopened after delivery.	X	
Style B Boxes (3.2.1.2)	Style B boxes are not in accordance with ASTM D 5118/5118M.	X	
	Cover does not extend to half the depth of the tube.	X	
Style C Boxes (3.2.1.3)	Style C boxes are not in accordance with ASTM D 5118/5118M.	X	
	Joints for covers and single-piece tubes are not butted and secured with metal fasteners.	X	
Style D (3.2.2.1)	Style D boxes are not in accordance with ASTM D 5118/5118M	X	
	The sleeve overlap is not stitched, stapled, or glued.	X	
Style G (3.2.3.1)	Style G boxes are not in accordance with ASTM D 5118/5118M.	X	
Bonding of Components (3.2.5)	Cushioning components are not adhered to box components with 50 percent contact area.		X

Examine	Defect	Major	Minor
Bonding of Components (3.2.5) (continued)	Cushioning is not centered and adhered into position in accordance with applicable figures.		X
Dimensions (3.3)	Length, width, or depth varies by more than ±3 mm (1/8 inch) from size specified. See paragraph for measurement details.	X	
	The center of the die-cut star cavity for type I and IV is not within 13 mm (1/2 inch) of true center.	X	
Markings (3.4)	Markings are missing, illegible, incomplete, or incorrect.	X	
	Markings are not positioned as specified or of proper size.		X
Workmanship (3.6)	Improper fit of components.	X	
Condition of components (boxes, sleeves, slides, caps, tubes, and cushions)	Tear, split, or puncture (affecting serviceability).	X	
	Unduly dirty, stained, or scuffed.	X	
	Unduly ragged, uneven, or crushed edges (except crushed edge of fibreboard at manufacturer's joint)	X	

4.3.2.2 Examination of the end item for count per bundle. The sample unit for this examination shall be one bundle of one type, style, and size of assembled packs. The count per bundle shall be not less than specified.

4.3.2.3 Examination of preparation for delivery. An examination shall be made to determine that packaging, packing, and markings comply with the requirements of section 5. The sample unit for this examination shall be one shipping container or pallet load prepared for shipment.

4.3.2.4 Inspection levels for examination. The inspection levels, for determining the sample size, shall be as follows:

Examination Paragraph	Inspection Level
4.3.2.1	S - 1
4.3.2.2	S - 4
4.3.2.3	S - 1

4.4 Anti-static property test. The static decay time of anti-static cushioning material shall be determined in accordance with FED-STD-101, Method 4046, Electrostatic Properties of Materials. A static decay time greater than 2 seconds shall be cause for rejection (see 3.1.2.4). Cushioning material specimen thickness shall be 13 mm (1/2 inch) plus 3 mm (1/8 inch) minus zero.

4.5 Corrosivity test. Anti-static cushioning material specimens shall be tested in accordance with FED-STD-101, Method 3005, Contact Corrosivity Test of Solid Materials in Flexible, Rigid, or Granular Forms (see 3.1.2.5). Four test surfaces shall be exposed for 72 hours. The four test surfaces shall be:

a. QQ-A-225/6 aluminum, alloy 2024, temper T6.

b. IPC MF-150 copper foil, rolled, nominal weight 3.05 Kg/m^2 (10 oz/ft^2), nominal thickness 0.36 mm (0.014 inches).

c. Silver plated copper foil (foil same as 4.5.b.), plating thickness 2.54×10^{-3} mm - 5.1×10^{-3} mm (100-200 micro inches).

d. SN63 tin-lead eutectic solder coated copper foil (foil same as 4.5 b.), coating thickness 5.1×10^{-3} mm - 12.7×10^{-3} mm (200-500 micro inches), QQ-S-571.

Plated or coated test surfaces shall not be ground or abraded, but otherwise shall be prepared in accordance with 3.8.2 of FED-STD-101. After the exposure period, the presence of corrosion as defined in 2.1 of FED-STD-101 or exposure of base metal shall be cause for rejection.

5. PACKAGING

5.1 Packaging. All packs must be fully assembled ready to use, upon submission to the government. Style A box's shall be folded and secured (see 3.2.1.1). All shipments shall conform to ASTM D 3951. All packs consisting of one type, style, and size shall be submitted on each palletized load or inside each shipping container. The number of packs inside each shipping container is at the discretion of the supplier.

5.2 Marking. Each shipping container or placard, for palletized loads, shall be marked in accordance with ASTM D 3951, or as required in the contract or purchase order.

6. NOTES

6.1 Intended use. These packs are intended for use as standard, exterior, reusable packing media in the packaging, preservation, handling, shipment, and storage of serviceable and repairable items as prescribed by cognizant packaging activities. Type I packs may be used for items such as meters, gauges, and instruments. Type II packs may be used for items which are essentially flat (6 mm (1/4 inch) to 65 mm (2-1/2 inches) such as circuit boards, electronic modules, and tubes. Type III packs may be used for black-box type items, such as receiver-transmitters, amplifiers, power supply units and electronic indicators. Type IV packs may be used for electrical-electronic items generally having a small cross section relative to length, such as control generators, amplifiers, volt-meters, protection panels, transformers, and regulators. Additional information regarding weight limits and fragility range of items applicable to these packs may be found in MIL-STD-2073-1A.

6.2 Ordering data. Purchasers should select the preferred options permitted herein and include the following information in procurement documents:

a. Title, number, and date of this specification.

b. Type, style, and size of box (see 1.2.1).

c. Units to be used in box markings (metric or English, see 3.4).

d. Special markings (see 5.2)

6.3 Samples. Normally no samples for determining compliance with this specification will be necessary prior to award. If samples with bids are required, they should be specifically requested in the invitation for bids, and the purpose of the bid sample should be definitely stated, the specification to apply in all other respects.

6.4 Metric units. Metric units, to those English equivalents indicated in parenthesis throughout this document, are based on practices, conversion factors, and symbols specified in ASTM E 380. Metric units are not exact conversions from English units and are not intended to be so. All metric units should be

adhered to. English equivalents are only provided for convenience and should not be used for procurement purposes.

6.5 Classification cross-reference.

Rev D	Rev C	Rev B/ 001672A (USAF)	PPP-C-001672 (USAF)
Type I	Type I	Type I	Type I
Style A	Style A	Style A	Style - Regular slotted carton (RSC)
Style B	Style B	Style B	Style - Double cover container (DBLCC)
Style C	Style C	Style C	Style - Modified double cover container (Modified DBLCC)
Type II	Type II	Type II	Type II
Style D	Style D	Style D	Style - Modified triple slide (Modified TS)
--------	--------	Style E	
--------	--------	Style F	
Type III	Type III	Type III	----------
Style G	Style G	Style G	----------
Type IV	Type IV	Type IV	----------
Style B	Style B	Style B	----------

6.6 Key Word Listing.

Reusable Container
Fast Pack
Anti-Static
Slide Pack

6.7 Changes from previous issue. Asterisks (or vertical lines) are not used in this revision to identify changes with respect to the previous issue due to the extensiveness of the changes.

MILITARY INTERESTS:

Custodians
Air Force - 69
Navy - AS
Army - SM

Reviewers:
Air Force - 70, 71, 80, 82, 84, 99
Navy - SA
Army - GL, CR

CIVIL AGENCY
COORDINATING ACTIVITY:
GSA-FSS

PREPARING ACTIVITY:

Air Force - 69

DOD project 8115-0551

CUSHIONED BOX DATA

ALL DIMENSIONS ARE IN MILLIMETERS (INCHES)

BOX SIZE (ID) L x W x D	DETAIL No. 1					DETAIL No. 2 L x W x D
	L	W	D	di	do	
155x155x255 (6x6x10)	155 (6)	155 (6)	155 (6)	38 (1.5)	115 (4.5)	155x155x50 (6x6x2)
205x205x305 (8x8x12)	205 (8)	205 (8)	205 (8)	65 (2.5)	155 (6)	205x205x50 (8x8x2)
255x255x305 (10x10x12)	255 (10)	255 (10)	155 (6)	90 (3.5)	180 (7)	255x255x75 (10x10x3)
305x305x355 (12x12x14)	305 (12)	305 (12)	205 (8)	115 (4.5)	205 (8)	305x305x75 (12x12x3)
305x305x460 (12x12x18)	305 (12)	305 (12)	255 (10)	115 (4.5)	205 (8)	305x305x100 (12x12x4)
355x355x405 (14x14x16)	355 (14)	355 (14)	255 (10)	140 (5.5)	255 (10)	355x355x75 (14x14x3)

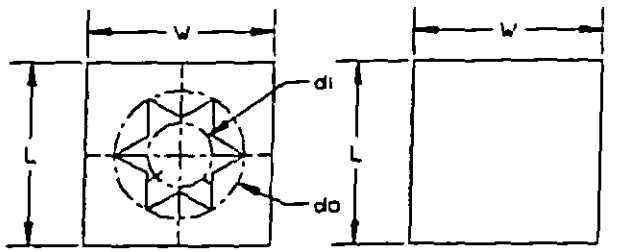

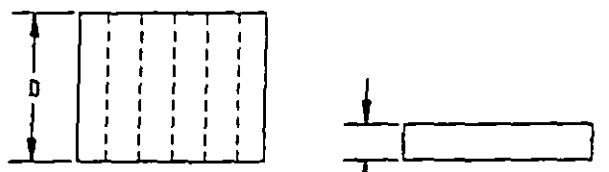

CUSHIONING DETAIL No.1 (BODY) SEE (3.3)

CUSHIONING DETAIL No. 2 (TOP/BOTTOM PADS)

Style A - Regular slotted carton (RSC)

Style B - Double cover container (DBLCC)

Style C - Modified double cover container (MODIFIED DBLCC)

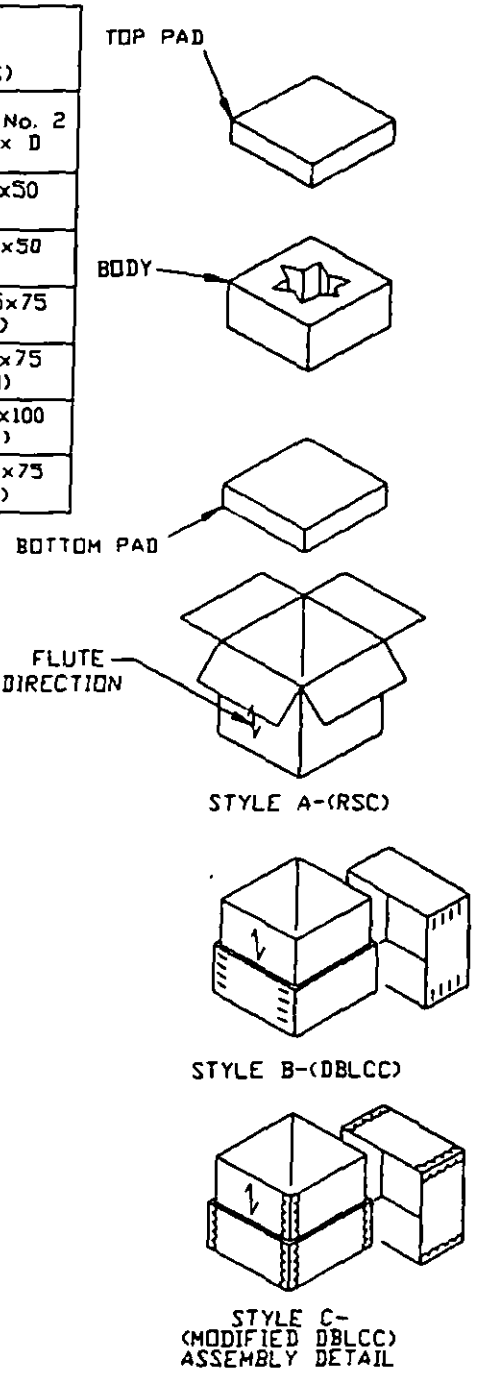

FIGURE 1. TYPE I

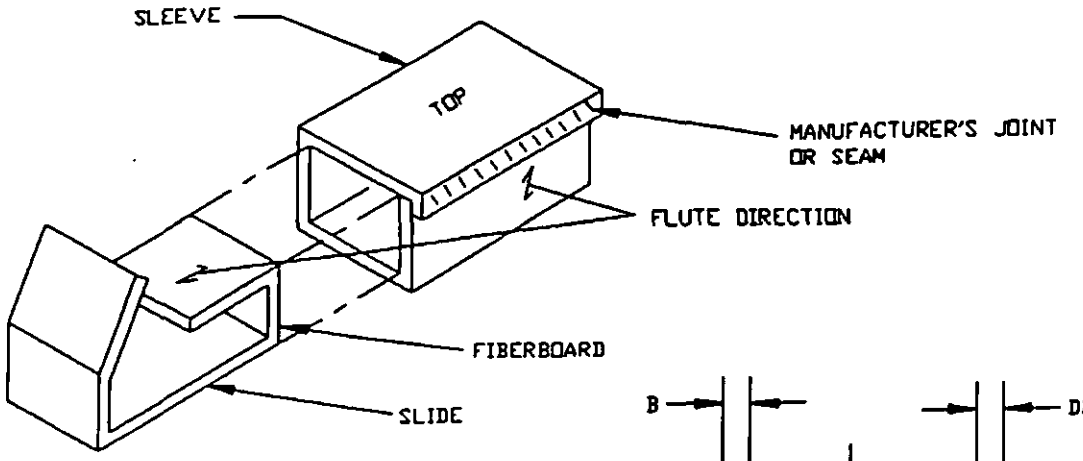

ASSEMBLY DETAIL

NOTE: STYLE D - SEE TABLE II FOR DIMENSIONS

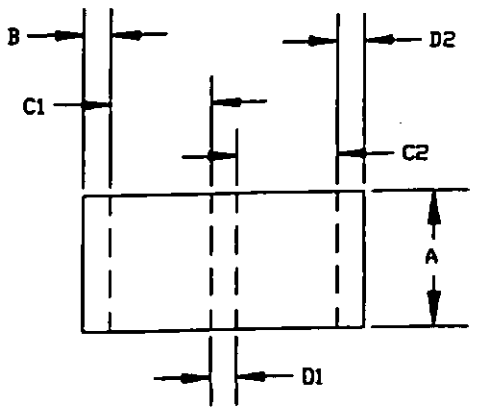

SLEEVE DETAIL NO. 1

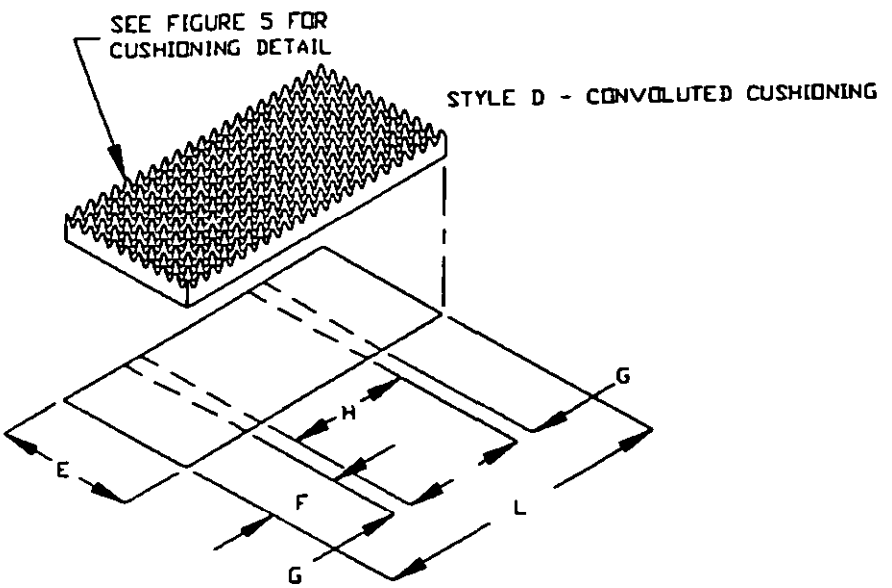

SLIDE DETAIL NO. 2

FIGURE 2. TYPE II, STYLE D MODIFIED TRIPLE SLIDE BOX (MODIFIED TS)

TABLE II - TYPE II, STYLE D - MODIFIED TRIPLE SLIDE BOX (MODIFIED TS)
ALL DIMENSIONS ARE IN MILLIMETERS (INCHES)

Box Size (ID)	SLEEVE DETAIL NO.1					SLIDE DETAIL NO. 2					CUSHIONING DETAIL NO. 5		
L x W x D	A	B	C1	D1	C2	D2	E	F	G	H	I	K	L
155 x 125 x 65 (6 x 5 x 2-1/2)	160 (6-3/16)	35 (1-3/8)	135 (5-3/8)	78 (3-1/8)	132 (5-1/4)	77 (3-1/16)	122 (4-7/8)	75 (3-1/16)	68 (2-5/8)	158 (6-1/8)	40 (1-1/2)	25 (1)	445 (17-1/2)
155 x 125 x 90 (6 x 5 x 3-1/2)	160 (6-3/16)	35 (1-3/8)	135 (5-3/8)	103 (4-1/8)	132 (5-1/4)	102 (4-1/16)	122 (4-7/8)	75 (3-1/16)	83 (3-5/8)	158 (6-1/8)	40 (1-1/2)	25 (1)	495 (19-1/2)
230 x 155 x 65 (9 x 6 x 2-1/2)	235 (9-3/16)	35 (1-3/8)	165 (6-3/8)	78 (3-1/8)	162 (6-1/4)	77 (3-1/16)	152 (5-7/8)	113 (4-9/16)	68 (2-5/8)	233 (9-1/8)	40 (1-1/2)	25 (1)	595 (23-1/2)
230 x 155 x 90 (9 x 6 x 3-1/2)	235 (9-3/16)	35 (1-3/8)	165 (6-3/8)	103 (4-1/8)	162 (6-1/4)	102 (4-1/16)	152 (5-7/8)	113 (4-9/16)	83 (3-5/8)	233 (9-1/8)	40 (1-1/2)	25 (1)	645 (25-1/2)
255 x 255 x 90 (10 x 10 x 3-1/2)	260 (10-3/16)	35 (1-3/8)	265 (10-3/8)	103 (4-1/8)	262 (10-1/4)	102 (4-1/16)	252 (9-7/8)	125 (5-1/16)	83 (3-5/8)	258 (10-1/8)	40 (1-1/2)	25 (1)	695 (27-1/2)
305 x 205 x 65 (12 x 8 x 2-1/2)	310 (12-3/16)	35 (1-3/8)	215 (8-3/8)	78 (3-1/8)	212 (8-1/4)	77 (3-1/16)	202 (7-7/8)	150 (6-1/16)	68 (2-5/8)	308 (12-1/8)	40 (1-1/2)	25 (1)	745 (29-1/2)
305 x 205 x 90 (12 x 8 x 3-1/2)	310 (12-3/16)	35 (1-3/8)	215 (8-3/8)	103 (4-1/8)	212 (8-1/4)	102 (4-1/16)	202 (7-7/8)	150 (6-1/16)	83 (3-5/8)	308 (12-1/8)	40 (1-1/2)	25 (1)	795 (31-1/2)
330 x 330 x 90 (13 x 13 x 3-1/2)	335 (13-3/16)	35 (1-3/8)	340 (13-3/8)	103 (4-1/8)	337 (13-1/4)	102 (4-1/16)	227 (12-7/8)	163 (6-9/16)	83 (3-5/8)	333 (13-1/8)	40 (1-1/2)	25 (1)	845 (33-1/2)
405 x 405 x 90 (16 x 16 x 3-1/2)	410 (16-3/16)	35 (1-3/8)	415 (16-3/8)	103 (4-1/8)	412 (13-1/4)	102 (4-1/16)	402 (15-7/8)	200 (8-1/16)	83 (3-5/8)	408 (16-1/8)	40 (1-1/2)	25 (1)	995 (39-1/2)
460 x 305 x 65 (18 x 12 x 2-1/2)	465 (18-3/16)	35 (1-3/8)	315 (12-3/8)	78 (3-1/8)	312 (12-1/4)	77 (3-1/16)	302 (11-7/8)	228 (9-1/16)	68 (2-5/8)	463 (18-1/8)	40 (1-1/2)	25 (1)	1055 (41-1/2)
460 x 305 x 90 (18 x 12 x 3-1/2)	465 (18-3/16)	35 (1-3/8)	315 (12-3/8)	103 (4-1/8)	312 (12-1/4)	102 (4-1/16)	302 (11-7/8)	228 (9-1/16)	83 (3-5/8)	463 (18-1/8)	40 (1-1/2)	25 (1)	1105 (43-1/2)
610 x 405 x 90 (24 x 16 x 3-1/2)	615 (24-3/16)	35 (1-3/8)	415 (16-3/8)	103 (4-1/8)	412 (16-1/4)	102 (4-1/16)	402 (15-7/8)	303 ((12-1/16)	83 (3-5/8)	613 (24-1/8)	40 (1-1/2)	25 (1)	1405 (55-1/2)

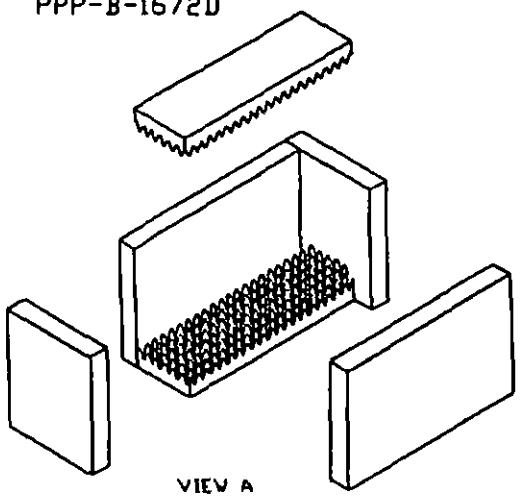

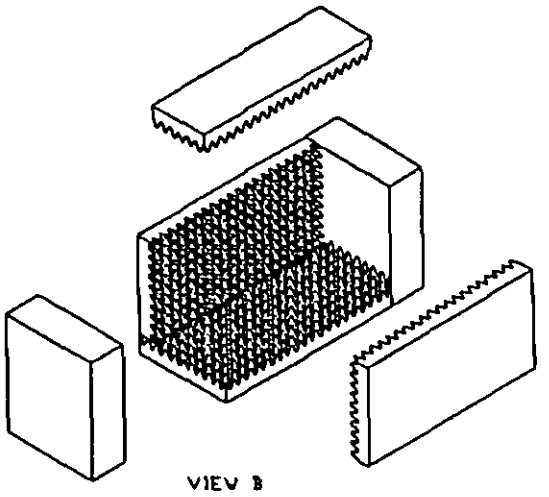

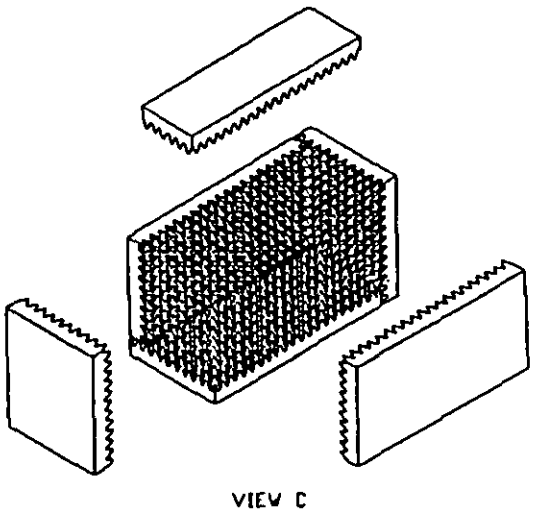

CUSHIONING ASSEMBLY VIEWS

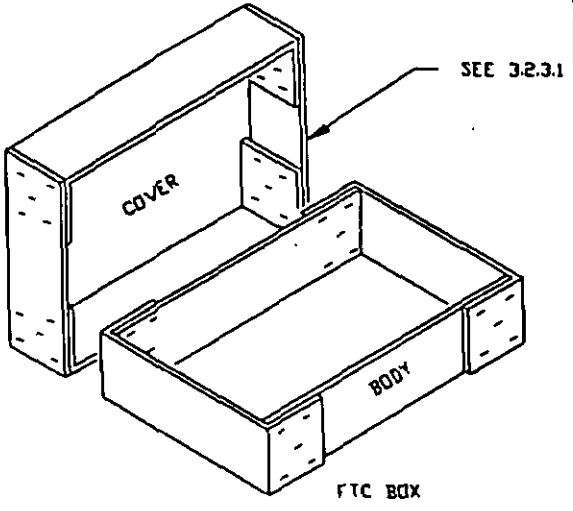

CUSHIONED BOX DATA

ALL DIMENSIONS ARE IN MILLIMETERS (INCHES)

BOX SIZE (ID) L x W x D	ASSY VIEW	CUSHIONING PADS NOTE: Pads are convoluted unless noted as flat. TOP (1 EACH)	BOTTOM (1 EACH)	SIDE (2 EACH)	END (2 EACH)	END PADS ONLY * J	K	CUSHION DETAIL * J	K
510x355x230 (20x14x9)	A	395x240x70 (15.5x9.5x2.75)	405x255x70 (16x10x2.75)	405x230x50 (16x9x2) FLAT	355x230x50 (14x9x2) FLAT	----	----	70 (2.75)	38 (1.5)
610x355x355 (24x14x14)	C	405x155x95 (16x6x3.75)	420x355x95 (16.5x14x3.75)	420x260x95 (16.5x10.25x3.75)	355x355x95 (14x14x3.75)	----	----	95 (3.75)	38 (1.5)
610x460x405 (24x18x16)	C	405x255x95 (16x10x3.75)	420x460x95 (16.5x18x3.75)	420x310x95 (16.5x12.25x3.75)	460x405x95 (18x16x3.75)	----	----	95 (3.75)	38 (1.5)
635x355x355 (25x14x14)	B	320x100x120 (12.5x4x4.75)	330x355x120 (13x14x4.75)	330x235x120 (13x9.25x4.75)	355x355x155 (14x14x6) FLAT	----	----	120 (4.75)	38 (1.5)
660x230x230 (26x9x9)	C	460x75x70 (18x3x2.75)	470x230x70 (18.5x9x2.75)	470x160x70 (18.5x6.25x2.75)	230x230x95 (9x9x3.75)	95 (3.75)	38 (1.5)	70 (2.75)	38 (1.5)
760x405x355 (30x16x14)	C	560x205x95 (22x8x3.75)	570x405x95 (22.5x16x3.75)	570x260x95 (22.5x10.25x3.75)	405x355x95 (16x14x3.75)	----	----	95 (3.75)	38 (1.5)
760x685x355 (30x27x14)	C	560x485x95 (22x19x3.75)	570x685x95 (22.5x27x3.75)	570x260x95 (22.5x10.25x3.75)	685x355x95 (27x14x3.75)	----	----	95 (3.75)	38 (1.5)
815x305x355 (32x12x14)	C	610x100x95 (24x4x3.75)	625x305x95 (24.5x12x3.75)	625x260x95 (24.5x10.25x3.75)	305x355x95 (12x14x3.75)	----	----	95 (3.75)	38 (1.5)
815x460x405 (32x18x16) **	C	560x255x95 (22x10x3.75)	570x460x95 (22.5x18x3.75)	570x310x95 (22.5x12.25x3.75)	460x405x120 (18x16x4.75)	120 (4.75)	38 (1.5)	95 (3.75)	38 (1.5)
865x610x460 (34x24x18) **	C	610x405x95 (24x16x3.75)	625x610x95 (24.5x24x3.75)	625x360x95 (24.5x14.25x3.75)	610x460x120 (24x18x4.75)	120 (4.75)	38 (1.5)	95 (3.75)	38 (1.5)

* SEE FIGURE 5 FOR CUSHIONING DETAIL.
** BOX MATERIAL COMPLYING WITH V13c (SEE 3.1.1).

FIGURE 3. TYPE III, STYLE G - FULL TELESCOPE BOX (FTC)

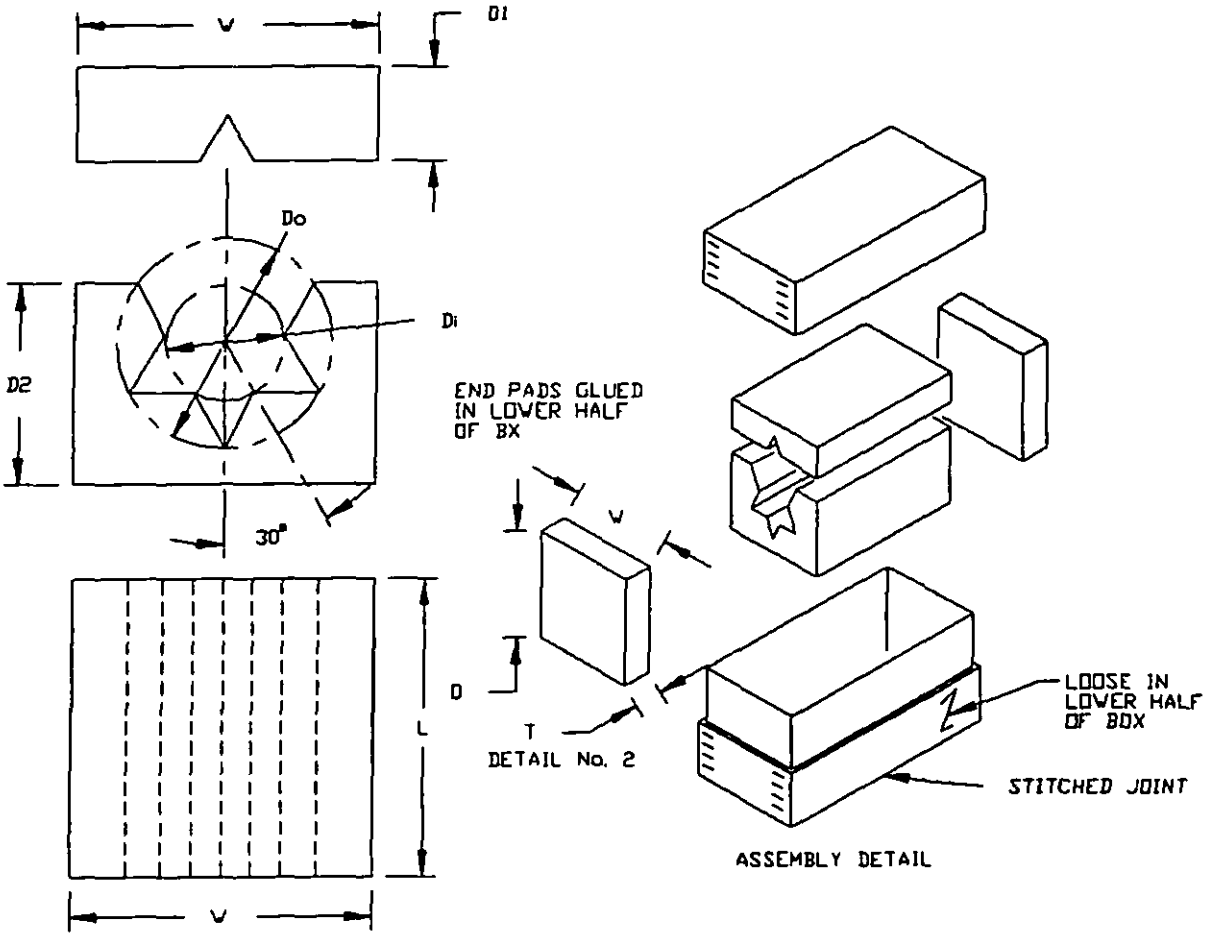

CUSHIONED BOX DATA ALL DIMENSIONS ARE IN MILLIMETERS (INCHES)							
BOX SIZE (ID) L x W x D	DETAIL No. 1						DETAIL No. 2 W x D x T
	L	W	D1	D2	di	do	
510x355x355 (20x14x14)	355 (14)	355 (14)	115 (4.5)	240 (9.5)	140 (5.5)	255 (10)	355x355x75 (14x14x3)
560x405x405 (22x16x16)	405 (16)	405 (16)	125 (5)	280 (11)	165 (6.5)	305 (12)	405x405x75 (16x16x3)

FIGURE 4. TYPE IV, STYLE B - DOUBLE COVER CONTAINER (DBLCC)

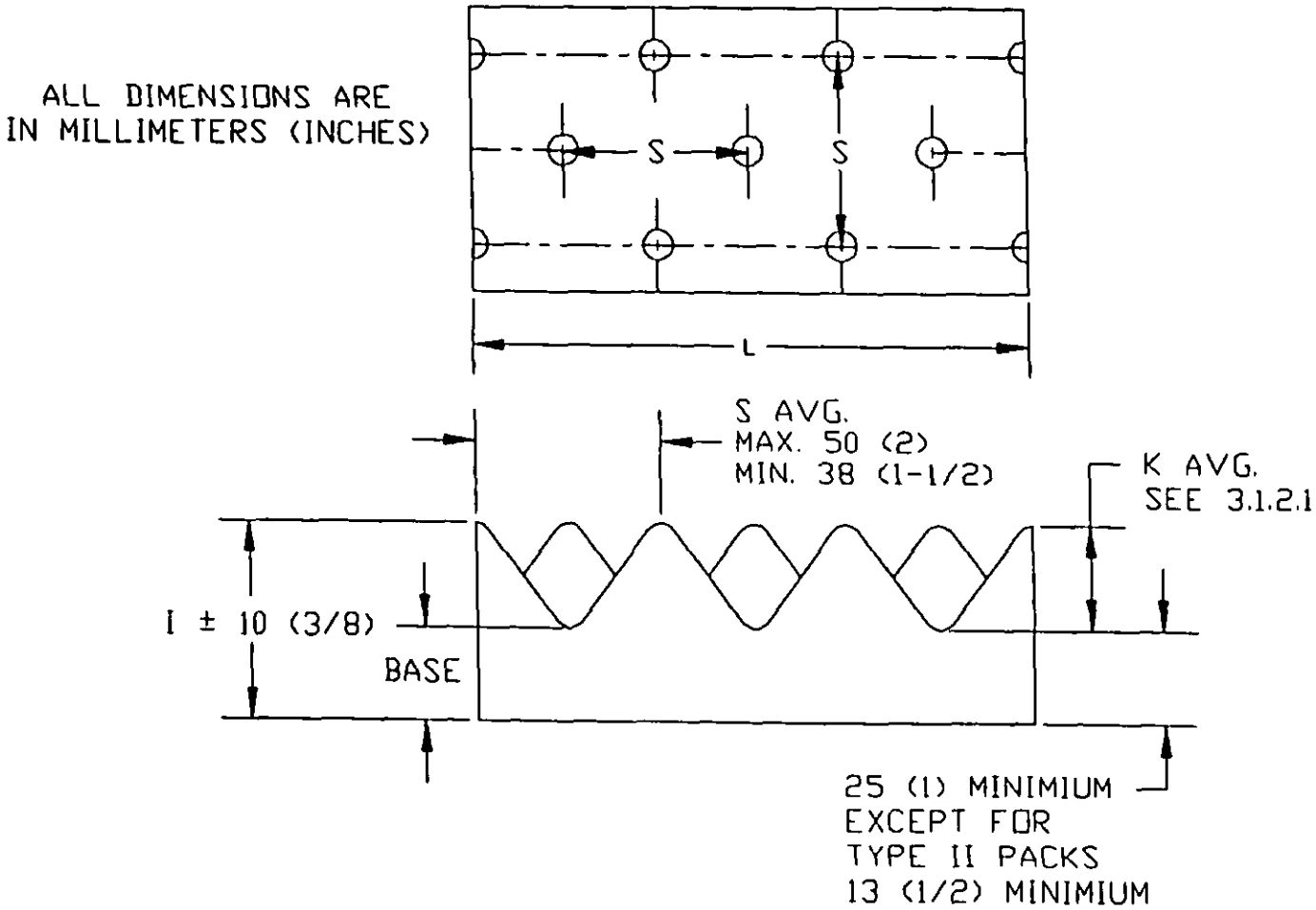

FIGURE 5. STANDARD CONVOLUTED CUSHIONING DETAIL

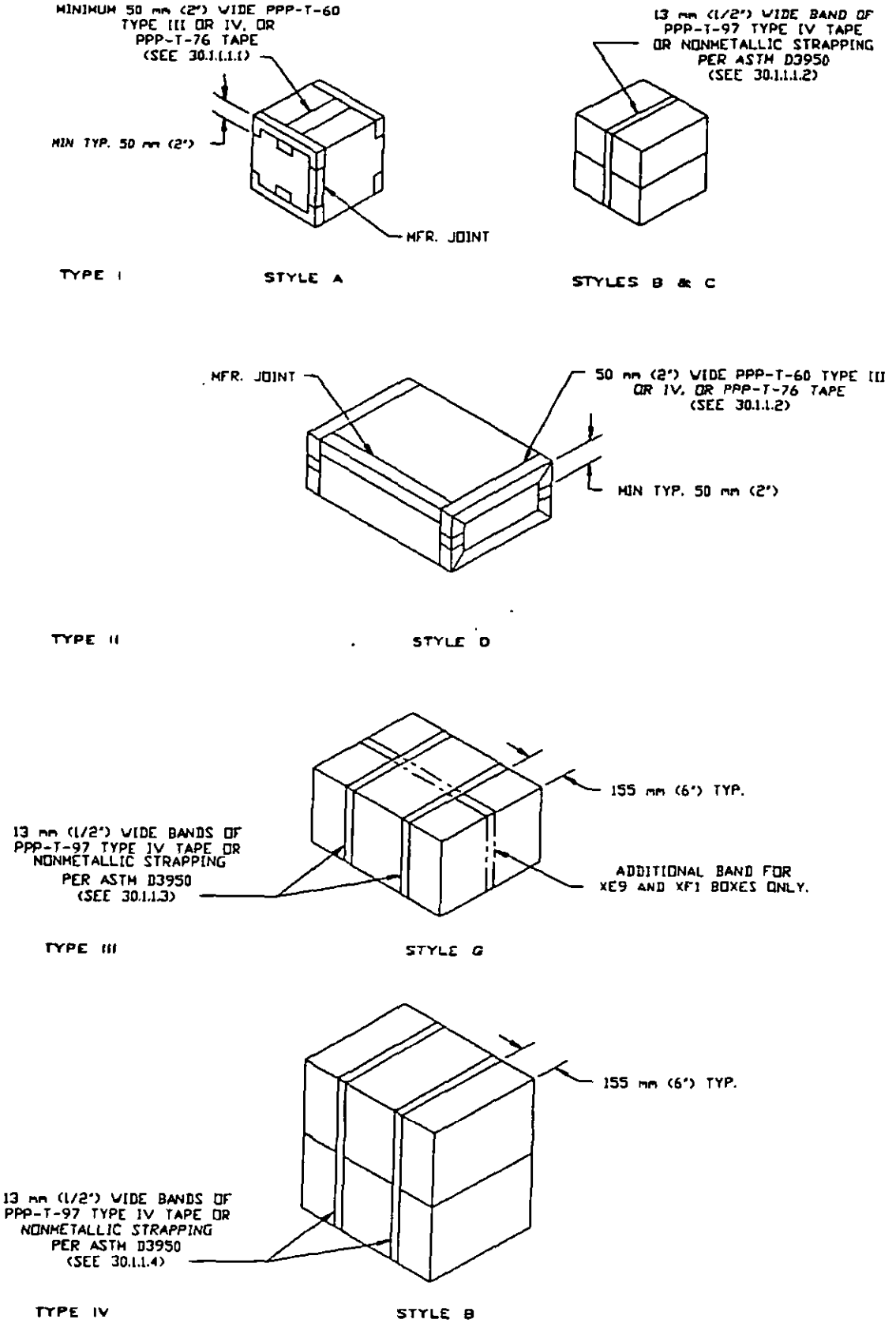

FIGURE 6. CLOSURE OF FAST-PACK BOXES FOR LEVEL B PACKING

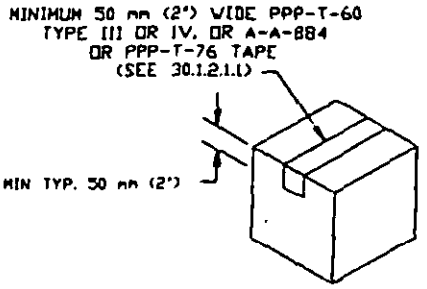

TYPE I STYLE A

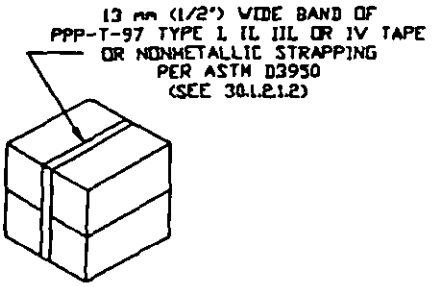

STYLES B & C

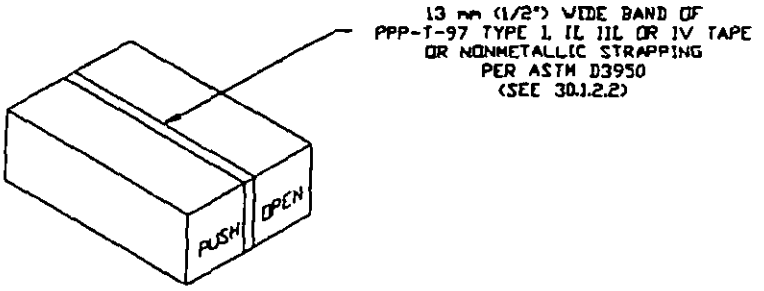

TYPE II STYLE D

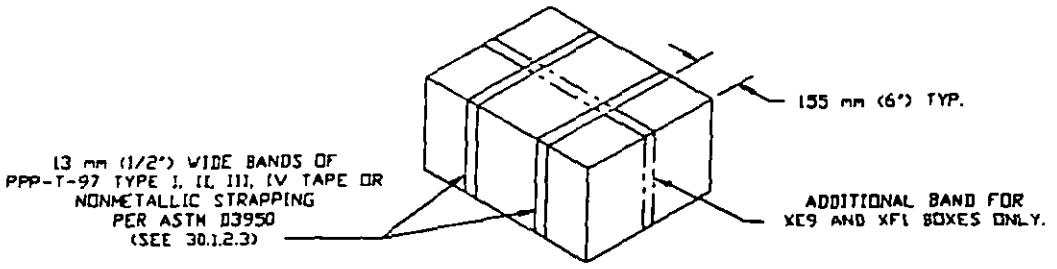

TYPE III STYLE G

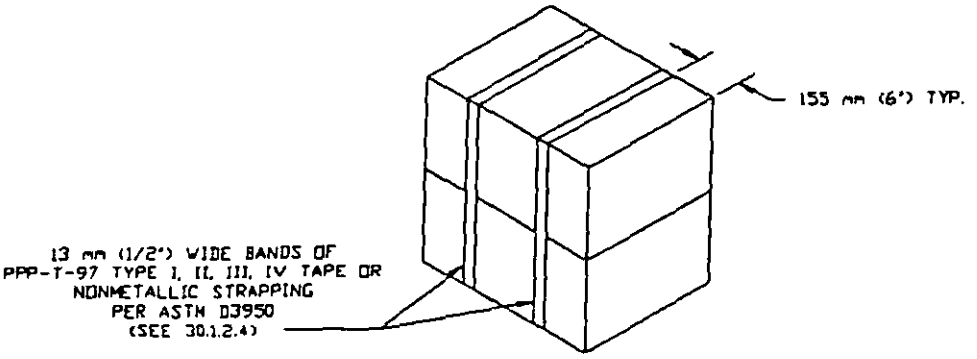

TYPE IV STYLE B

FIGURE 7. CLOSURE OF FAST-PACK BOXES FOR LEVEL C PACKING

APPENDIX

CLOSURE, OPENING, AND INSPECTION REQUIREMENTS

10. SCOPE

10.1 This appendix covers requirements for closure, reinforcing, opening, reuse, and inspection of Fast Packs.

20. APPLICABLE DOCUMENTS

20.1 Federal Documents. The following documents and those documents which are listed in this section are those in effect on date of invitation for bids or request for proposal, form a part of this appendix to the extent specified herein:

Federal Specifications

A-A-884 - Tape, Pressure-Sensitive Adhesive, Box Closure

PPP-T-60 - Tape, Packaging, Waterproof

PPP-T-76 - Tape, Packaging, Paper (For Carton Sealing)

PPP-T-97 - Tape, Pressure Sensitive Adhesive, Filament Reinforced

Federal Standard

FED-STD-123 - Marking for Shipment (Civil Agencies)

Military Standard

MIL-STD-129 - Marking for Shipment and Storage

20.2 Other Publications

ASTM

D 3950 Standard Specification for Strapping, Plastic (and Seals) (DoD Adopted)

30. REQUIREMENTS

30.1 Closure and marking of Fast Packs. Closure of fast pack shall be effected when item is placed therein and packed for shipment and storage. Marking for military shipment and storage

of packs shall comply with MIL-STD-129. Marking of packs for civil agencies shall be in accordance with FED-STD-123. The tape used for reinforcement and sealing shall be of the specification, type, and size as specified for each type and style of box to provide level B and level C packing (see 30.1.1 and 30.1.2). Insofar as practical, no preprinted markings, except container certification marking, shall be obscured by taping or reinforcement. Obscured or obliterated markings that are preprinted on reused boxes need not be remarked except for the pack code (see TABLE I).

30.1.1 Level B packing (see figure 6).

30.1.1.1 Type I

30.1.1.1.1 Style A. Type I, style A packs shall be sealed with a minimum of 50 mm (2 inch) wide tape conforming to PPP-T-76 or PPP-T-60, type III or IV applied over all seams, corners, and manufacturer's joints. The tape shall be centered over the seams and joints and shall extend over all the corners and edges of the box a minimum of 50 mm (2 inches) onto the adjacent box panels. Tape shall be applied over the lengthwise seam of the outer flaps, sealing the opening of the box and over the manufacturer's joint prior to tape being applied to the edge seams of the box. The tape applied to the manufacturer's joint shall cover the joint but not extend over the corners of the box onto the adjacent panels. This method also serves as the closure.

30.1.1.1.2 Styles B and C. Type I, styles B and C packs shall be centrally reinforced with one fully encircling band of 13 mm (1/2 inch) wide tape conforming to PPP-T-97, type IV, or 6 mm (1/4 inch) nonmetallic strapping conforming to ASTM D 3950 with a minimum tensile strength of 1790 N (400 lbs_f). This method serves as the closure. Sealing is not required.

30.1.1.2 Type II, style D. In the manner specified in 30.1.1.1.1 for style A, seal all open seams and manufacturer's joints with 50 mm (2 inch) wide tape conforming to either PPP-T-60, type III or IV, or PPP-T-76. This method also serves as the closure.

30.1.1.3 Type III, style G. Type III, style G packs shall be reinforced with fully encircling bands of 13 mm (1/2 inch) wide tape conforming to PPP-T-97, type IV or 6 mm (1/4 inch) nonmetallic strapping conforming to ASTM D 3950 with a minimum tensile strength of 1790 N (400 lbs_f). Two bands shall be positioned 155 mm (6 inches) from the ends over the top, bottom, and sides. Add one lengthwise band over the top, bottom, and

ends for XE9 and XF1 Fast Packs. This method serves as the closure. Sealing is not required.

30.1.1.4. Type IV, Style B. Reinforcement shall be as specified in 30.1.1.3, except the lengthwise band shall not apply. This method serves as the closure. Sealing is not required.

30.1.2. Level C packing (see figure 7).

30.1.2.1. Type I

30.1.2.1.1. Style A. Type I, style A packs shall be closed with minimum 50 mm (2 inch) wide tape conforming to A-A-884, PPP-T-60, type III or IV, or PPP-T-76. The tape shall be centered over the seam formed by the closure of the outer flaps of the top and shall extend down over the end panels not less than 50 mm (2 inches).

30.1.2.1.2. Styles B and C. Type I, styles B and C shall be reinforced as specified in 30.1.1.1.2 except that the PPP-T-97 tape used may be type I, II, III, or IV or a 6 mm (1/4 inch) nonmetallic strapping conforming to ASTM D 3950 with a minimum tensile strength of 716 N (160 lbs_f). This method serves as the closure. Sealing is not required.

30.1.2.2. Type II, style D. Type II, style D packs shall be reinforced with one fully encircling band of 13 mm (1/2 inch) wide tape conforming to PPP-T-97, type I, II, III, or IV or a 6 mm (1/4 inch) nonmetallic strapping conforming to ASTM D 3950 with a minimum tensile strength of 716 N (160 lbs_f). The band shall be placed lengthwise and centered over the top, bottom and ends (between the words "PUSH and OPEN"). This method serves as the closure. Sealing is not required.

30.1.2.3. Type III, style G. Type III, style G packs shall be reinforcement as specified in 30.1.1.3, except the PPP-T-97 tape used may be type I, II, III, or IV or a 6 mm (1/4 inch) nonmetallic strapping conforming to ASTM D 3950 with a minimum tensile strength of 716 N (160 lbs_f). This method serves as the closure. Sealing is not required.

30.1.2.4. Type IV, style B. Reinforcement of type IV, style B packs shall be as specified in 30.1.1.3, except the PPP-T-97 tape used may be type I, II, III, or IV or a 6 mm (1/4 inch) nonmetallic strapping conforming to ASTM D 3950 with a minimum tensile strength of 716 N (160 lbs_f) and the lengthwise band shall not apply. This method serves as the closure. Sealing is not required.

30.2 Opening of Fast Packs. To open the Fast Pack boxes, the closure and reinforcing tape shall be cut with a shallow knife at a minimum number of seam locations which will permit opening and preclude any damage to the box. Do not remove totally adhered tape.

30.3 Reuse of Fast Packs. In reusing of Fast Packs, the following procedures should be observed:

a. Surfaces to which tape for closure or reinforcement is to be applied must be free of loose soil, oil, or grease. These surfaces should be wiped clean prior to application of tape.

b. Tape applied to reused containers should be applied directly over the existing tape.

c. Loose ends of existing tape should be cut off, not torn loose. Tearing the tape from the box damages the box surface and weakens the container walls.

40. INSPECTION

40.1 New and reused boxes for shipment and storage shall be inspected only to determine compliance with the tape closure and reinforcing (tape banding) requirements of this appendix. Sampling shall be conducted in accordance with the provisions of ANSI/ASQC Z1.4.

40.1.1 Inspection for tape closure and banding. Classification of defects shall be as specified in TABLE III Sample unit for this examination shall be one complete box. Lot size shall be expressed in terms of sample units. The inspection level shall be S-3.

TABLE III Examination for tape closure and banding.

Examine	Defect
Taping (sealing or banding, as applicable)	No type, class, or size specified (see 30.1). Not applied as specified. Missing strip. Loose strip. Torn or cut strip (permitted on reused boxes).

STANDARDIZATION DOCUMENT IMPROVEMENT PROPOSAL

INSTRUCTIONS

1. The preparing activity must complete blocks 1, 2, 3, and 8. In block 1, both the document number and revision letter should be given.
2. The submitter of this form must complete blocks 4, 5, 6, and 7.
3. The preparing activity must provide a reply within 30 days from receipt of the form.

NOTE: This form may not be used to request copies of documents, nor to request waivers, or clarification of requirements on current contracts. Comments submitted on this form do not constitute or imply authorization to waive any portion of the referenced document(s) or to amend contractual requirements.

I RECOMMEND A CHANGE:	1. DOCUMENT NUMBER	2. DOCUMENT DATE (YYMMDD)
	PPP-B-1672	96 02 01

3. DOCUMENT TITLE
Boxes, Shipping, Reusable with cushioning

4. NATURE OF CHANGE *(Identify paragraph number and include proposed rewrite, if possible. Attach extra sheets as needed.)*

5. REASON FOR RECOMMENDATION

6. SUBMITTER

a. NAME (Last, First, Middle Initial)	b. ORGANIZATION	
c. ADDRESS (Include Zip Code)	d. TELEPHONE (Include Area Code) (1) Commercial (2) AUTOVON (If applicable)	7. DATE SUBMITTED (YYMMDD)

8. PREPARING ACTIVITY

a. NAME	b. TELEPHONE (Include Area Code)	
Air Force Packaging Technology and Engineering Facility	(1) Commercial 513-257-4519	(2) AUTOVON 787-4519
c. ADDRESS (Include Zip Code) 5215 Thurlow St WPAFB OH 45433-5540	IF YOU DO NOT RECEIVE A REPLY WITHIN 45 DAYS, CONTACT: Defense Quality and Standardization Office 5203 Leesburg Pike, Suite 1403, Falls Church, VA 22041-3466 Telephone (703) 756-2340 AUTOVON 289-2340	